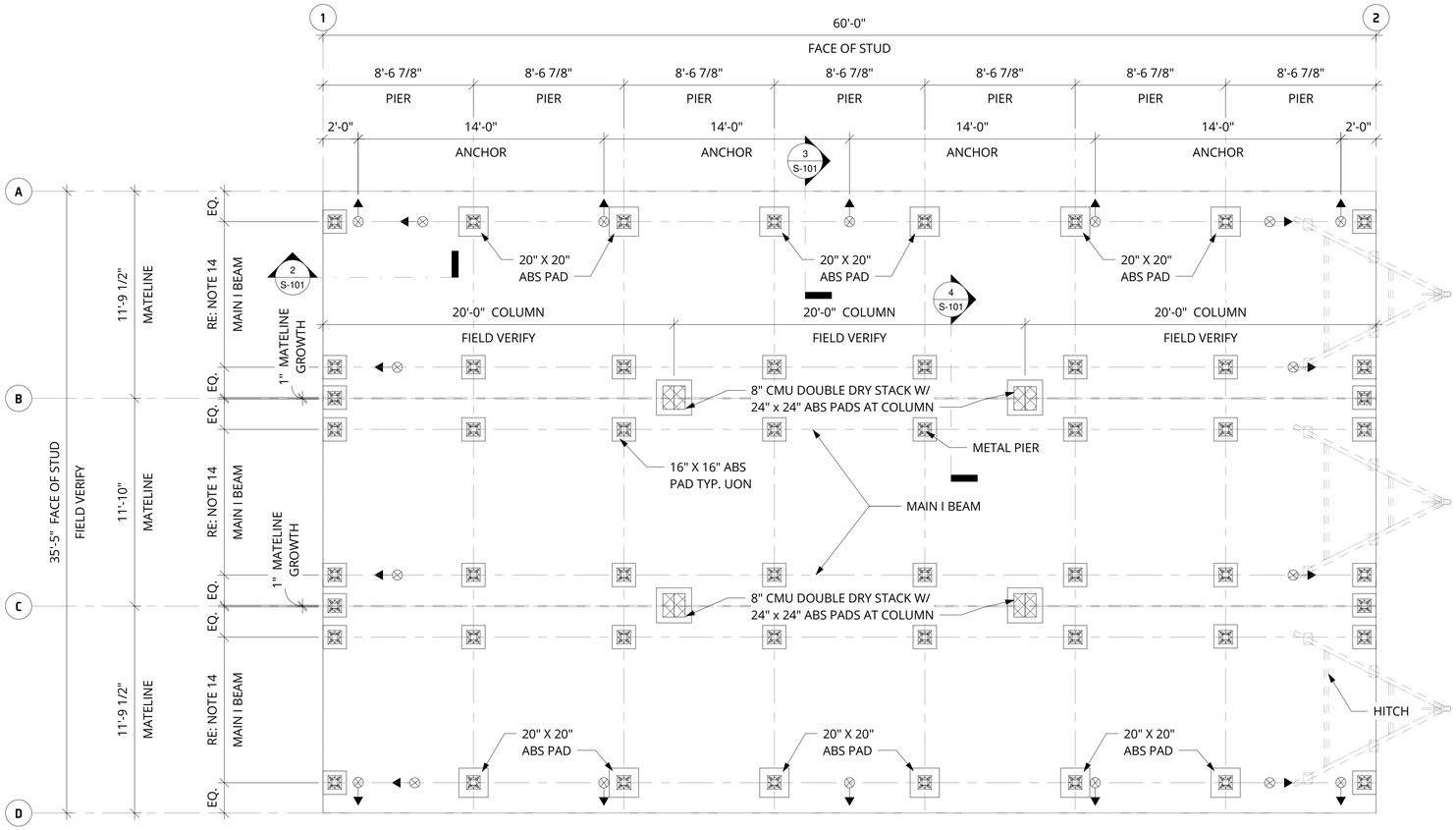

1 FOUNDATION PLAN
1/4" = 1'-0"

MATERIAL QUANTITY	
DESCRIPTION	COUNT
16" X 16" ABS PAD	40
20" X 20" ABS PAD	12
24" X 24" ABS PAD	4
MINUTE MAN ANCHOR OR APPROVED EQUAL AUGER ANCHOR WITH STABILIZER PLATE	18
MINUTE MAN ANCHOR OR APPROVED EQUAL MMA-34 & MMA-71C	8
WRAP METAL STRAP AROUND STEEL BEAM WITH MINUTE MAN APPROVED OR EQUAL MMA-32 BUCKLE STRAP	10

FOUNDATION NOTES:
1. FOUNDATION REVIEW AND INSPECTION IS TO BE PERFORMED BY THE LOCAL OFFICIAL HAVING JURISDICTION.
2. UNIT MAY BE SHIMMED AS REQUIRED BETWEEN TOP OF PIER AND MODULAR UNIT FRAME. HARDWOOD, METAL OR ABS SHIM CAN BE USE. WEDGE SHIM SHALL BE USED IN PAIRS.
3. TIE-DOWN STRAPS TO BE 1-1/4"x .035" TYPE-1, FINISH B, GRADE I ZINC COATED STEEL STRAPPING AS CONFORMING WITH ASTM D3953-91. TIE DOWN STRAPS AND CONNECTING HARDWARE SHALL HAVE 3150# MINIMUM WORKING CAPACITY.
4. UNDERGROUND UTILITY LOCATIONS ARE THE RESPONSIBILITY OF OTHERS. ALL UNDERGROUND UTILITY LOCATIONS MUST BE VERIFIED PRIOR TO ANY EXCAVATION.
5. PROVIDE 1 SQUARE FOOT OF CRAWL SPACE VENTILATION FOR EACH 150 SQUARE FEET OF CRAWL SPACE AREA. IF SUITABLE VAPOR BARRIER IS PROVIDED RATIO CAN BE INCREASE TO 1/1500.
6. PROVIDE MINIMUM CRAWL SPACE UNDER ACCESS UNIT OF 18" x 24".
7. DIMENSIONS SHALL BE FIELD VERIFIED.
8. FINISHED FLOOR ELEVATION FFE = 100'-0" IS FOR REFERENCE ONLY
9. ALLOWABLE SOIL BEARING CAPACITY IS 2500 PSF.
10. FIELD VERIFY EXISTING CONDITION. IF THERE ARE DISCREPANCIES, THE ENGINEER OF RECORD SHALL BE NOTIFIED.
11. MINUTE MAN PRODUCT SHALL BE INSTALLED PER MANUFACTURER SPECIFICATION.
12. ALL PIERS SHALL BE RATED FOR 6000 LBS.
13. DOUBLE DRY STACK CMU SHALL NOT EXCEED 48 INCHES IN HEIGHT WITHOUT PERIMETER CEMENT BONDING.
14. DIMENSION BETWEEN MAIN I BEAM SHALL BE FIELD VERIFIED BEFORE THE SETUP OF MODULAR UNITS.

BUILDING LEGEND:

INDICATES MINUTE MAN ANCHOR OR APPROVED EQUAL AUGER ANCHOR WITH STABILIZER PLATE. TOP OF ARROW INDICATES ANCHOR LOCATION.

DESIGN LOAD:
BUILDING CODE: 2022 OR STRUCTURAL SPECIALTY CODE
ROOF LIVE LOAD =20 PSF
FLOOR LIVE LOAD =50 PSF
FLOOR DEAD LOAD =10 PSF
ROOF DEAD LOAD =10 PSF
EXTERIOR WALL DEAD LOAD = 60 PLF

WIND SPEED
V = 98 MPH (ULT)
V = 76 MPH (ASD)
EXPOSURE C
INTERNAL PRESSURE COEFFICIENT GCpi = ± 0.18
RISK CATEGORY II

SNOW LOAD + RAIN-ON-SNOW SURCHARGE:
ROOF SNOW LOAD Pf = 25 PSF

SEISMIC LOADS:
RISK CATEGORY - II
MAPPED SPECTRAL RESPONSE ACCELERATIONS - Ss = 0.754, S1 = 0.33
SITE CLASS - D
SPECTRAL RESPONSE COEFFICIENT - Sds = 0.603, Sd1= 0.433
SEISMIC DESIGN CATEGORY D
BASIC FORCE RESISTING SYSTEM - LIGHT FRAMED WOOD WALL SHEATHED WITH WOOD
STRUCTURAL PANEL RATED FOR SHEAR RESISTANCE
ANALYSIS PROCEDURE - EQUIVALENT LATERAL FORCE PROCEDURE
RESPONSE MODIFICATION FACTOR - R = 6.5
SEISMIC RESPONSE COEFFICIENT - Cs = 0.0928
DESIGN BASE SHEAR - V = 5.0 K

ABS PAD NOTES:
1. CLEAR ALL VEGETATION AND DEBRIS FROM THE AREA WHERE THE ABS PAD ARE TO BE PLACED.
2. GROUND UNDER ABS PAD SHALL BE LEVELED AND EVENLY COMPACTED.
3. PLACE ABS PAD WITH GRID SIDE UP, SMOOTH SIDE DOWN.

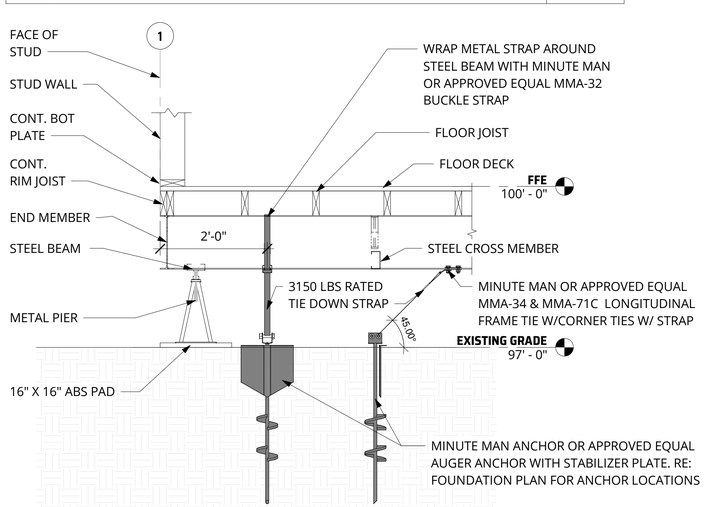

2 END WALL SECTION
3/4" = 1'-0"

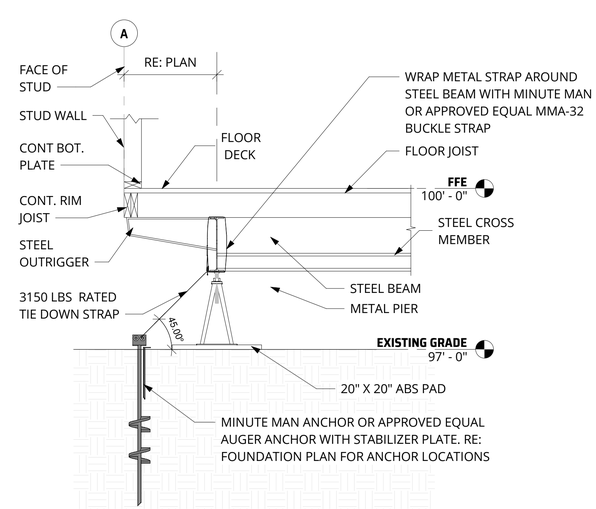

3 OUTRIGGER SECTION
3/4" = 1'-0"

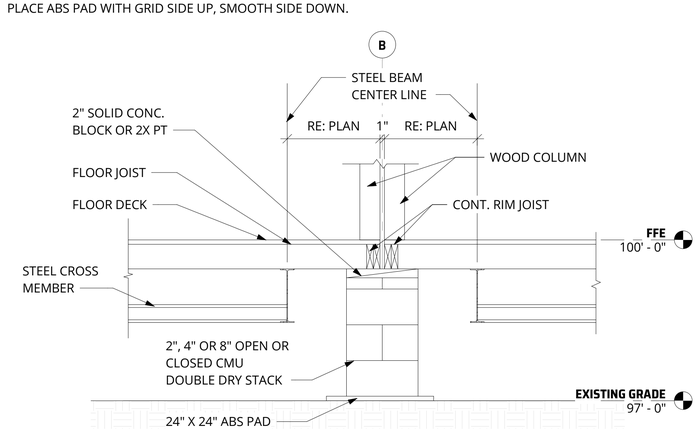

4 COLUMN MATELINE SECTION
3/4" = 1'-0"

WILLSCOT
WILLIAMS SCOTSMAN INC.
4646 East Van Buren Street,
Suite 400, Phoenix, AZ 85008
800.782.1500 | WILLSCOT.COM

10/3/2024

REGISTERED PROFESSIONAL ENGINEER 87081PE OREGON SEPTEMBER 11, 2024 THIERRY R. LEBOULCH

EXPIRES:12/31/2024

Thierry Leboulch Digitally signed by Thierry Leboulch Date: 2024.10.07 08:35:14 -05'00'

BULL RUN FILTRATION
(3) 12 X 60 MODULAR UNITS
36800 SE LUSTED RD
BORING, OR 97009

ISSUE	DATE	DESCRIPTION

FILE #:	WS2024-1427
DRAWN BY:	AD
DATE:	10/2/2024
REP:	RICK RAYHEL
ASSET #:	
ASSET TYPE:	E-PLEX
MODEL:	CPX-11650

FOUNDATION PLAN AND SECTIONS

S-101

10/7/2024 8:34:41 AM

OWNERSHIP OF DOCUMENTS: THIS DOCUMENT AND THE IDEAS AND DESIGNS INCORPORATED HEREIN ARE INSTRUMENTS OF SERVICE WHICH ARE, AND SHALL REMAIN, THE PROPERTY OF WILLSCOT AND ARE NOT TO BE REPRODUCED, TRANSFERRED IN HARD OR ELECTRONIC FORM, USED IN WHOLE OR IN PART BY ANY OTHER ARCHITECT, MANUFACTURER OR CONTRACTOR, OR USED ON ANY OTHER PROJECT WITHOUT EXPRESS WRITTEN CONSENT OF WILLSCOT. THE ARCHITECT / ENGINEER WHO HAS AFFIXED THEIR SEAL HERETO SHALL HAVE NO RESPONSIBILITY FOR AND SHALL BE INDEMNIFIED FROM AND AGAINST ANY AND ALL LOSS, COST, DAMAGE OR EXPENSE RELATED TO RECIPIENTS / CLIENT'S BREACH OF THE AFOREMENTIONED CONDITIONS.

DISCLAIMER: THIS DOCUMENT IS TO BE EVALUATED IN CONJUNCTION WITH ALL RELATED PROJECT DOCUMENTATION. ANY DISCREPANCIES IDENTIFIED IN THIS DOCUMENT, INCLUDING THOSE RELATED TO DIMENSIONS, MUST BE REPORTED IMMEDIATELY TO THE ARCHITECT / ENGINEER PRIOR TO PROCEEDING WITH ANY BUILDING MANUFACTURE OR OTHER WORK. IN THE EVENT OF CONFLICT, THE SPECIFICATIONS, DIMENSIONS AND RENDERINGS HEREIN TAKE PRECEDENCE OVER RECIPIENT'S / CLIENT'S REQUIREMENTS.

WILLSCOT WILLIAMS SCOTSMAN INC. ALL RIGHTS RESERVED ©