STORMWATER DRAINAGE CONTROL CERTIFICATE

Land Use Planning Division

www.multco.us/landuse ▪ Email: land.use.planning@multco.us ▪ Phone: (503) 988-3043

> 500 SQUARE FEET OF NEW / REPLACED IMPERVIOUS SURFACES

NOTE TO PROPERTY OWNER/APPLICANT: Please have an Oregon Licensed Professional Engineer fill out this Certificate and attach a signed site plan, stamped and signed storm water system details, and stamped and signed storm water calculations used to support the conclusion. Please note that replacement of existing structures does not provide a credit to the square footage threshold.

Property Address or Legal Description: 36800 SE Lusted Rd Boring OR 97009

Description of Project: Temporary permit for onsite construction administration office trailers at the Filtration Facility site

The following stormwater drainage control system will be required:

- ☑ Use of Gutter, downspout, and splash block drainage control system;
- ☐ Natural Infiltration Process; or
- ☐ Construction of an on-site storm water drainage control system.

The rate of stormwater runoff attributed to the new/replaced development for a 10-year/24-hour storm event will be no greater than that which existed prior to any development as measured from the property line or from the point of discharge into a water body with the use of the designated system [MCC 39.6235].

I certify the attached signed site plan <u>showing the areas needed for the chosen system type</u>, stamped and signed <u>storm water system design details</u>, and stamped and signed <u>calculations</u> dated 11/05/2024 **will meet the requirements listed above.**

Signature: Rafael Gaeta 2024.11.05 11:00:45-08'00'

Print Name: Rafael Gaeta

Business Name: Emerio Design

Address: 6445 SW Fallbrook Place, Suite 100

Phone #: 503-746-8812

Email: rafael@emeriodesign.com

Date: 11/05/2024

Engineer's Stamp Below:

NOTE TO ENGINEER: Please check one box above. Multnomah County does not use the City of Portland's storm water ordinance. As part of your review, MCC 39.6235 requires that you must consider all new, replaced, and existing structures and impervious areas and determine that the newly generated stormwater from the new or replaced impervious surfaces is in compliance with Multnomah County Code for a 10-year/24-hour storm event. This Storm Water Drainage Control Certificate does not apply to shingle or roof replacement on lawfully established structures.

§ 39.6235 STORMWATER DRAINAGE CONTROL.

(A) Persons creating new or replacing existing impervious surfaces exceeding 500 square feet shall install a stormwater drainage system as provided in this section. This subsection (A) does not apply to shingle or roof replacement on lawful structures.

(B) The provisions of this section are in addition to and not in lieu of any other provision of the code regulating stormwater or its drainage and other impacts and effects, including but not limited to regulation thereof in the SEC overlay.

(C) The provisions of this section are in addition to and not in lieu of stormwater and drainage requirements in the Multnomah County Road Rules and Design and Construction Manual, including those requirements relating to impervious surfaces and proposals to discharge stormwater onto a county right-of-way.

(D) The stormwater drainage system required in subsection (A) shall be designed to ensure that the rate of runoff for the 10-year 24-hour storm event is no greater than that which existed prior to development at the property line or point of discharge into a water body.

(E) At a minimum, to establish satisfaction of the standards in this section and all other applicable stormwater-related regulations in this code, the following information must be provided to the planning director:

(1) A site plan drawn to scale, showing the property line locations, ground topography (contours), boundaries of all ground disturbing activities, roads and driveways, existing and proposed structures and buildings, existing and proposed sanitary tank and drainfields (primary and reserve), location of stormwater disposal, trees and vegetation proposed for both removal and planting and an outline of wooded areas, water bodies and existing drywells;

(2) Documentation establishing approval of any new stormwater surcharges to a sanitary drainfield by the City of Portland Sanitarian and/or any other agency authorized to review waste disposal systems;

(3) Certified statement, and supporting information and documentation, by an Oregon licensed Professional Engineer that the proposed or existing stormwater drainage system satisfies all standards set forth in this section and all other stormwater drainage system standards in this code; and

(4) Any other report, information, plan, certification or documentation necessary to establish satisfaction of all standards set forth in this section and all other applicable stormwater-related regulations in this code, such as, but not limited to, analyses and explanations of soil characteristics, engineering solutions, and proposed stream and upland environmental protection measures.

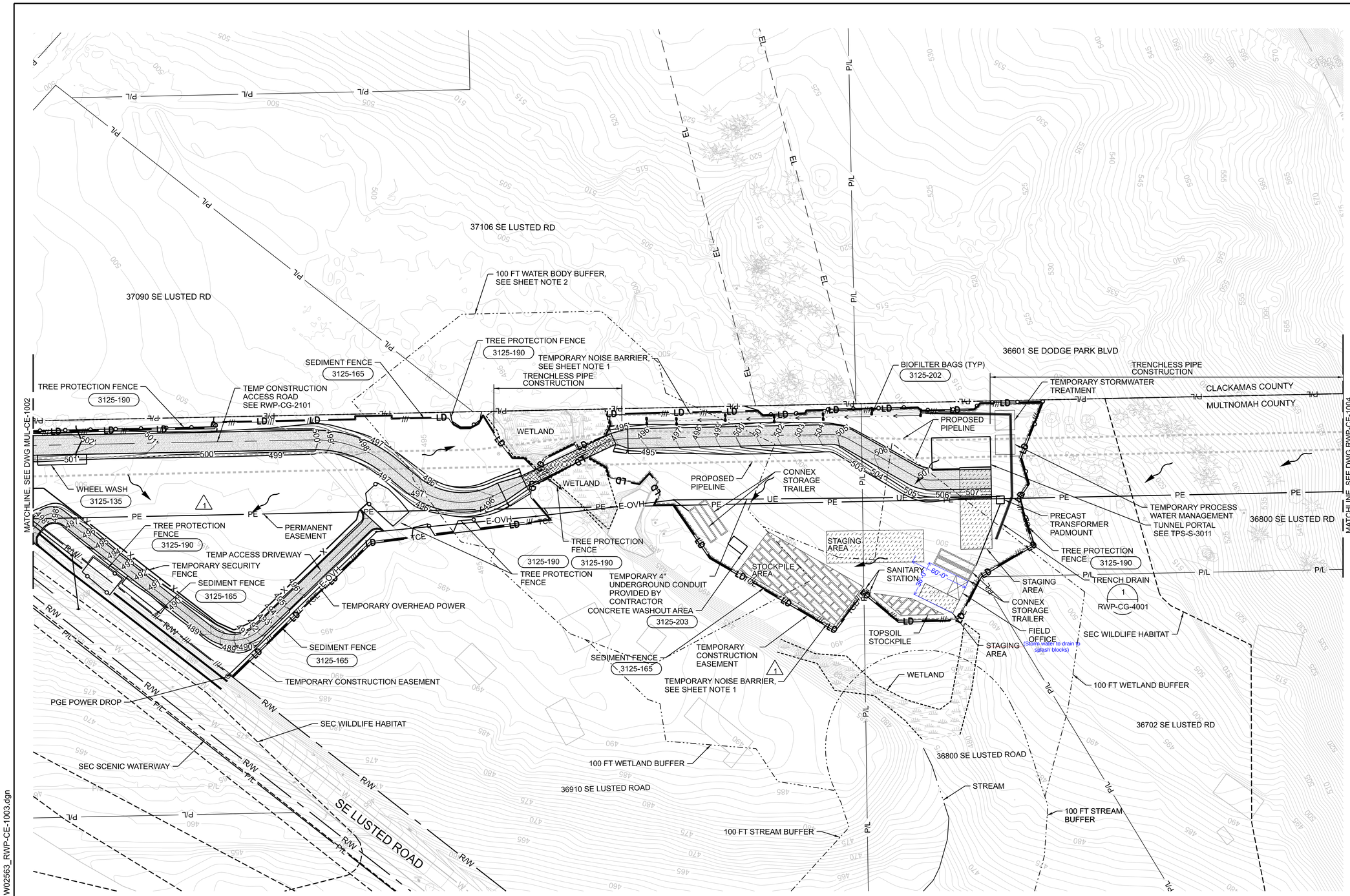

GENERAL NOTES

1. TEMPORARY PERIMETER NOISE BARRIERS SHALL BE ENGINEERED AND CONSTRUCTED IN FULL ACCORDANCE WITH SITE SPECIFICE ENGINEERING REQUIRMENTS (E.G. WIND LOADING, SEISMIC, FLAME/FIRE, ETC.) NOISE BARRIERS SHALL CONSIST OF A NOISE CURTAIN MATERIAL, SUCH AS SOUND SEAL MODE BBC-13-2, OR EQUIVALENTLY RATED MATERIAL (A SOUND TRANSMISSION CLASS (STC) RATING OF STC 30 OR GREATER, BASE ON SOUND TRANSMISSION LOSS DATA TAKEN ACCORDING ASTM TEST METHOD F90 ABD E413 AND NOISE REDUCTION COEFFICIENT OF 0.7 OR GREATER BASED ON ASTM C423). GAPS BETWEEN ADJACENT PANELS MUST BE FILLED-IN TO AVOID HAVING NOISE LEAK THROUGH HOLES IN THE BARRIER. A PRELIMINARY ALIGNMENT FOR AN 18 FT TALL BARRIER IS SHOWN ON THE DRAWING ALTERNATIVE ALIGNMENTS, HEIGHTS AND PRODUCTS ARE SUBJECT TO OWNER'S APPROVAL.
2. SEE RUSLE2 CALCULATIONS FOR BMPS TO REDUCE RUNOFF TO LESS THAN 1 TON/ACRE/YEAR OF SEDIMENT LOAD TO WATERBODY.
3. EROSION CONTROL MEASURES, SUCH AS SEDIMENT FENCE, TO FILTER STORMWATER FOR THE TEMPORARY FIELD OFFICE.

LEGEND

- SEDIMENT FENCE
- TREE PROTECTION FENCE
- LIMIT OF DISTURBANCE
- XXXX-XXX STANDARD DETAIL CALLOUT
- FLOW DIRECTION
- BMP BIOFILTER BAG
- TEMP SECURITY FENCE
- TCE TEMPORARY CONSTRUCTION EASEMENT
- PROPOSED GRAVEL
- TEMP HARDENED STRUCTURE
- 500' PROPOSED CONTOUR
- PROPOSED PIPELINE
- TRENCH DRAIN
- TEMPORARY UTILITY POLE
- E-OVH TEMPORARY OVERHEAD POWER
- UE TEMPORARY UNDERGROUND POWER
- PE PERMANENT EASEMENT
- NOISE BARRIER
- STOCKPILE AREA
- STAGING AREA
- SANITARY STATION
- FIELD OFFICE
- CONNEX STORAGE TRAILERS

0 50 100 150
Scale In Feet

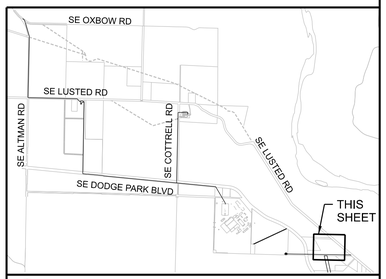

KEYPLAN

CONFIDENTIAL

W02563_RWP-CE-1003.dgn 5:11:29 PM 11/04/2024

No	Date	Description	Appd
1	10/2023	DCN-01 – CCD-0001	BJP

Revision

Survey

EMERIO ENGINEERING • SURVEYING • DESIGN

REGISTERED PROFESSIONAL ENGINEER 55529PE OREGON JULY 15, 2003 RAFAEL GAETA
Rafael Gaeta 2024.11.05 11:01:15-08'00'
EXPIRES 6-30-25

Designed By	RG	Program Mgr	DH
Drawn By	JIL	Const Mgr	BN
Checked By	RG	CM/I Eng Mgr	JB
Project Mgr	BJP	Date	9/29/23

WARNING
0 1"
If this bar does not measure 1" then the drawing is not to scale

PORTLAND WATER BUREAU
FROM FOREST TO FAUCET

KENNETH M. ACKERMAN, PRINCIPAL ENGINEER, PE #19424 Date

CITY OF PORTLAND, OREGON 1851

Bull Run Filtration Pipelines

RAW WATER PIPELINE EROSION AND SED CONTROL

UTILITY WORK 1

SAP Project No W02563
1/4 Section
Sheet No RWP-CE-1003

REUSE OF DOCUMENTS: THIS DOCUMENT, AND THE IDEAS AND DESIGNS INCORPORATED HEREIN ("DOCUMENTS"), AS AN INSTRUMENT OF PROFESSIONAL SERVICE, WAS PREPARED BY JACOBS SOLEY FOR THE PURPOSE OF THIS PROJECT AND DESIGN CRITERIA. JACOBS IS RELEASED FROM ANY AND ALL LIABILITY OF ANY KIND ARISING OUT OF OR RELATING TO THE RE-USE OF THE DOCUMENTS, IN WHOLE OR IN PART, FOR ANY OTHER PROJECT OR EXTENSIONS OF THIS PROJECT.

© JACOBS 2023. ALL RIGHTS RESERVED.

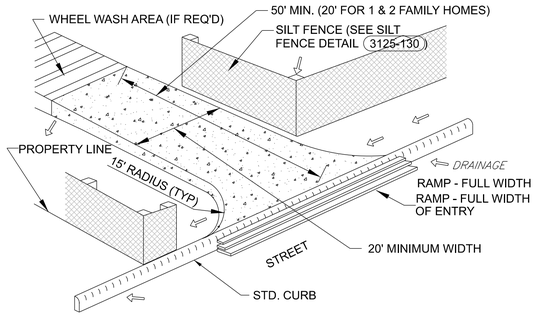

GRAVEL CONSTRUCTION ENTRANCE

NTS

3125-130

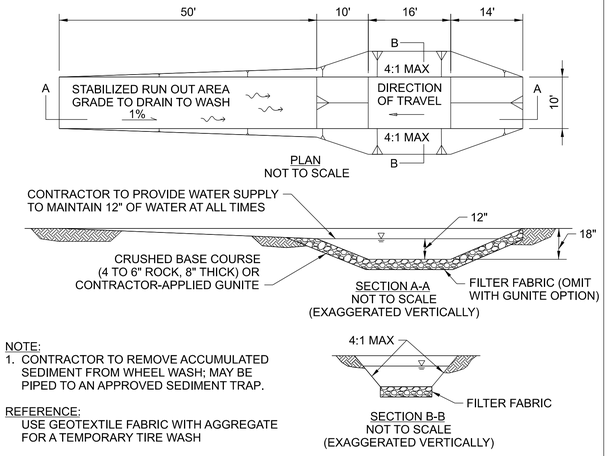

NOTE:
1. CONTRACTOR TO REMOVE ACCUMULATED SEDIMENT FROM WHEEL WASH; MAY BE PIPED TO AN APPROVED SEDIMENT TRAP.

REFERENCE:
USE GEOTEXTILE FABRIC WITH AGGREGATE FOR A TEMPORARY TIRE WASH

WHEEL WASH

NTS

3125-135

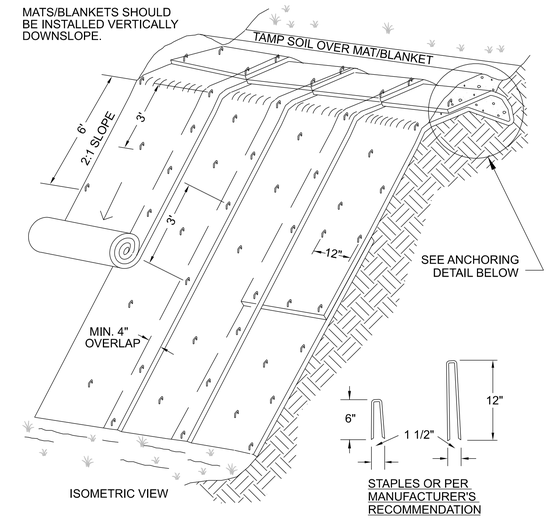

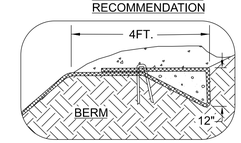

ANCHORING DETAIL
NOT TO SCALE

SLOPE STABILIZATION

NTS

3125-152

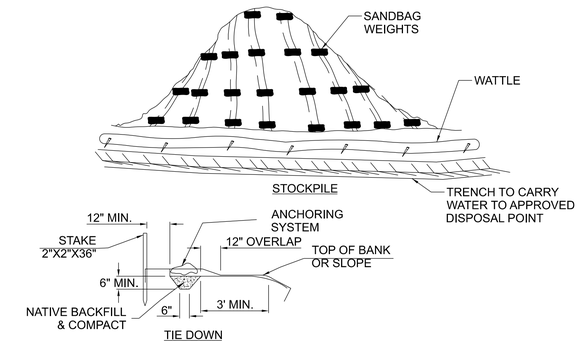

STOCKPILE

NTS

3125-161

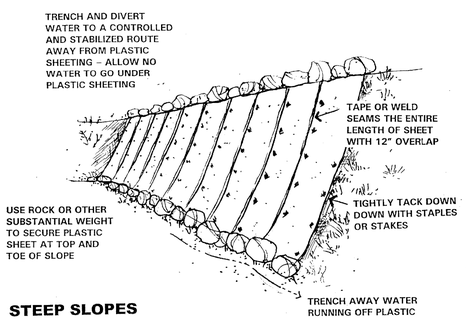

TEMPORARY SLOPE PROTECTION

NTS

3125-153

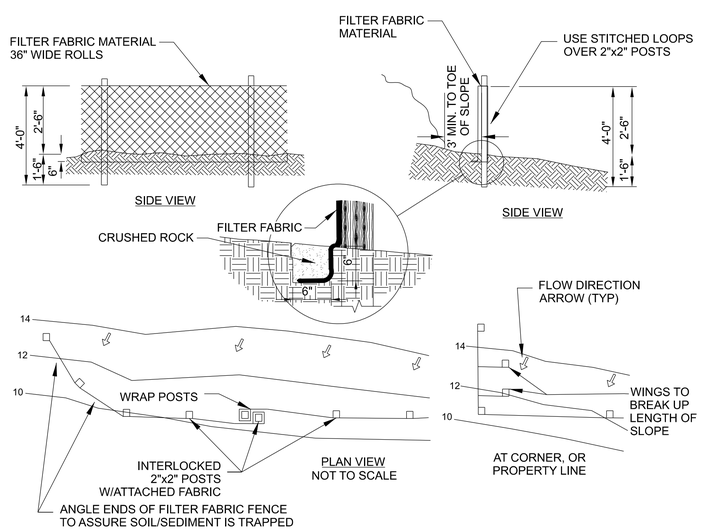

TEMPORARY SEDIMENT FENCE

NTS

3125-165

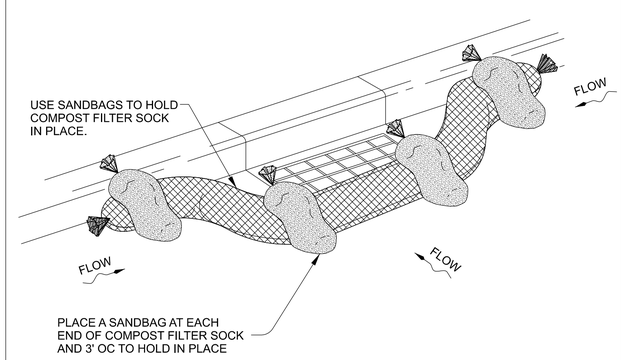

COMPOST FILTER SOCK - TYPE 7

NTS

3125-187

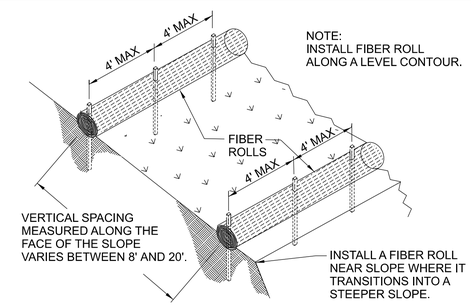

NOTE:
INSTALL FIBER ROLL ALONG A LEVEL CONTOUR.

TYPICAL FIBER ROLL INSTALLATION
NOT TO SCALE

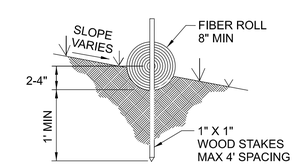

ENTRENCHMENT DETAIL
NOT TO SCALE

STRAW WATTLE

NTS

3125-188

CONFIDENTIAL

W02563_STD-CE-0001.dgn
05\16\2023 6:17:55 PM

No	Date	Description	Appd

Revision

Survey

EMERIO ENGINEERING • SURVEYING • DESIGN

REGISTERED PROFESSIONAL ENGINEER 55529PE
Rafael Gaeta 2024.11.05 11:01:48-08'00'
OREGON JULY 15, 2003 RAFAEL GAETA
EXPIRES 6-30-25

Designed By	RG	Program Mgr	DH
Drawn By	JL	Const Mgr	BN
Checked By	RG	CM/I Eng Mgr	JB
Project Mgr	BJP	Date	6/7/23

WARNING
0 1"
If this bar does not measure 1" then the drawing is not to scale

PORTLAND WATER BUREAU
FROM FOREST TO FAUCET

Kenneth M. Ackerman
KENNETH M. ACKERMAN, PRINCIPAL ENGINEER, PE #19424
6/7/2023
Date

CITY OF PORTLAND OREGON 1851

Bull Run Filtration Pipelines

STANDARD DETAILS
EROSION CONTROL
DETAILS 1

SAP Project No
W02563
1/4 Section

Sheet No
STD-CE-0001

REUSE OF DOCUMENTS: THIS DOCUMENT, AND THE IDEAS AND DESIGNS INCORPORATED HEREIN ("DOCUMENTS"), AS AN INSTRUMENT OF PROFESSIONAL SERVICE, WAS PREPARED BY JACOBS SOLEY FOR THE PURPOSE OF THIS PROJECT AND DESIGN CRITERIA. JACOBS IS RELEASED FROM ANY AND ALL LIABILITY OF ANY KIND ARISING OUT OF OR RELATING TO THE RE-USE OF THE DOCUMENTS, IN WHOLE OR IN PART, FOR ANY OTHER PROJECT OR EXTENSIONS OF THIS PROJECT.

©JACOBS 2023. ALL RIGHTS RESERVED.